Kink Table
Technical Specifications

Tait.

UPDATED • 15.09.24

The first thing that strikes you when you feast your eyes on Kink Table - a deliciously modern timber outdoor table - is the stunning treatment of line and form. The transfixing repetition of the sustainable Spotted Gum slats cascading over both ends of the table and bench makes it hard to avert the eye.

- Triple coated mild steel frame
- Spotted Gum timber slats
- UV stable powder coat colour or galvanised finish
- Customisation is available, please check with your nearest Tait stockist
- Optional concealed fixing

Second is the eponymous "kink" detail of the bench seat, which makes this outdoor ensemble stand head and shoulders above its peers. With all the hallmarks of an outdoor dining classic – it's the understated, perfectly executed and surprising detail that makes it "a Tait".

Flawlessly finished with seamless design detailing, the bench seat extends past the table leg in a distinct kink design, enabling easy step-in access.

Kink can be fixed to level ground with concealed fixings, making it perfect for hospitality and public space applications. Made from Australian sustainable Spotted Gum timber, with a zinc plated and powder coated metal frame. Stately and elegant, the Kink Bench Seat is perfect for home, hospitality, public spaces and more.

Kink Bench Seats slide effortlessly into any social situation be it home, work or recreation and are revered by architects and designers alike for its ability to speak to a range of residential and commercial contexts.

Kink affords peace of mind in specifying with genuine local manufacture using sustainable methodologies, quality craftsmanship supported with a manufacturer guarantee and product longevity.

See Tait's Table & Seating Guide for an indication of how many seats may fit this table.

All Tait pieces are made locally and come with a 5-year warranty.
Tait's original designs are protected under design registration and copyright.

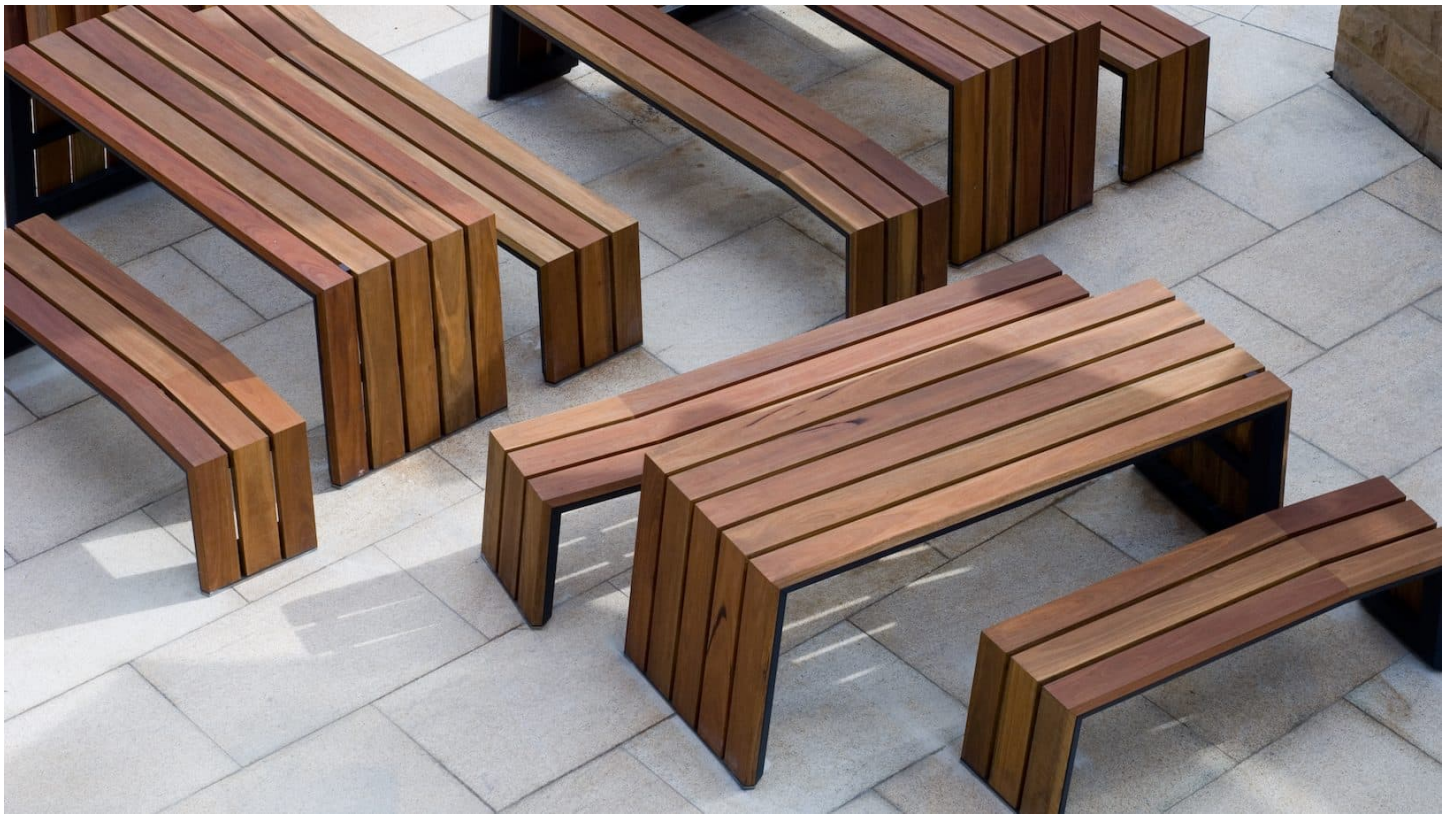

Available Finishes

Tait.

POWDER COAT

TEXTURED POWDER COAT COLOURS

Basalt Textured
Shale Grey Textured
Mountain Blue Textured
Banksia Leaf Textured
Black Textured
Burgundy Clay Textured
Core Ten Textured
Deep Ocean Textured
Headland Textured
Jasper Textured
Monument Textured
Ochre Textured
Pale Eucalypt Textured
Paperbark Textured
Surfmist Textured
Teal Sea Textured
White Textured
Woodland Grey Textured

STANDARD POWDER COAT COLOURS

Smoke Blue
Black Ace
Cottage Green
Dark Bronze
Monument
Pale Eucalypt
Paperbark Satin
Surfmist Satin
White Satin
Woodland Grey

Kink Table Dimensions

Tait.

1800 X 690

1800mm W
690mm D
730mm H

86.5in W x 34.25in D x 26.5in. H
103kg

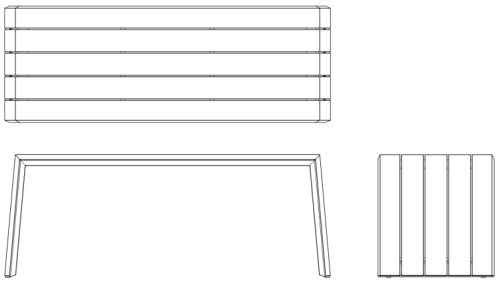

1800 X 830

1800mm W
830mm D
730mm H

86.5in W x 34.25in D x 26.5in. H
119kg

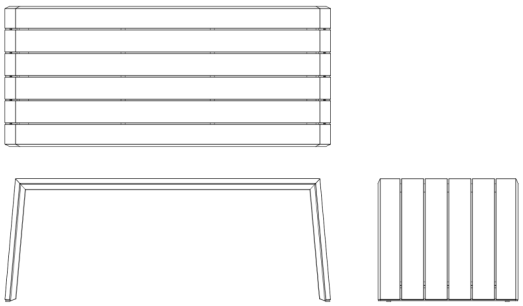

Kink Table Dimensions

Tait.

2100 X 830

2100mm W
830mm D
730mm H

86.5in W x 34.25in D x 26.5in. H
129kg

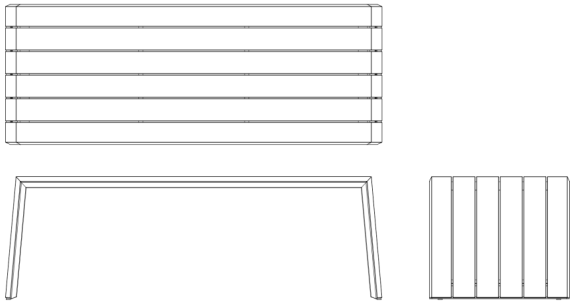

2100 X 970

2100mm W
970mm D
730mm H

86.5in W x 34.25in D x 26.5in. H
146kg

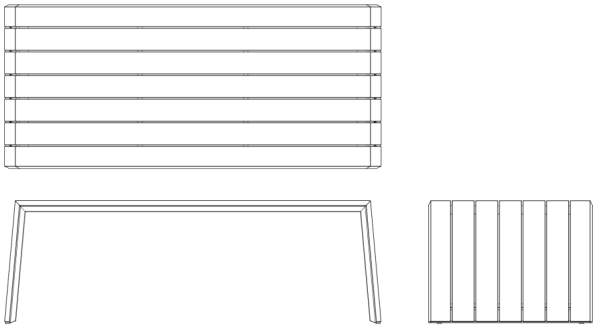

Kink Table Dimensions

Tait.

2400 X 830

2400mm W
830mm D
730mm H

86.5in W x 34.25in D x 26.5in. H
151kg

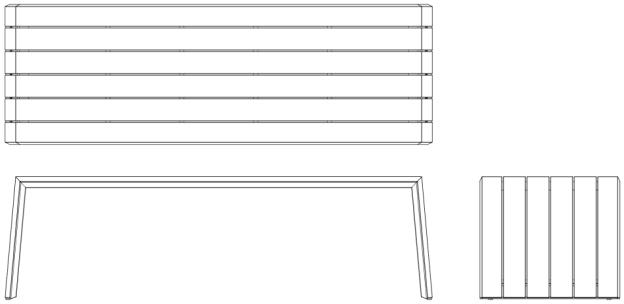

2400 X 970

2400mm W
970mm D
730mm H

86.5in W x 34.25in D x 26.5in. H
170kg

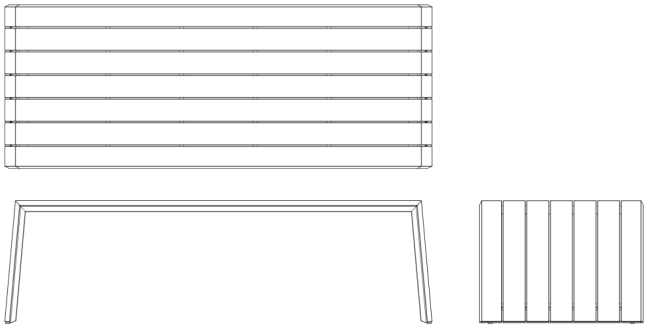

How to care for your Kink Table

Tait.

GENERAL CARE

At Tait, we make products for life. Our products are crafted from high-performance materials designed to withstand the elements across our diverse Australian climate zones. We make design decisions with both form and function in mind, combining timeless and cutting-edge designs with beautiful finishes in order to elevate your outdoor (or indoor) experience.

Our collections are handcrafted from weather-resistant materials, making each piece a durable choice. In order to maintain their look and feel over time, Tait items need ongoing care and maintenance. The frequency of maintenance will vary depending on the level of care you want to provide, your personal standards and requirements as well as the environment within which the product lives.

Please refer to the care instructions relevant to the specific materials and finishes of your product, and take note of the warranty details to understand the parameters.

We finish making our products by hand, and know they can live a long and useful life when equally cared for in your hands. For those rare occasions where it's needed, we offer a 5-year structural warranty (Australia only), made possible by the stringent quality control standards within our factory on Wurundjeri Land in Thomastown, Victoria.

The warranty does not cover:

- Damage from mishandling, mistreatment, abuse or lack of maintenance.
- Natural ageing, general wear and tear and fading.
- Damage from organic or man-made matter including mineral deposits, soils and fertilisers; or from the build-up of environmental mould.
- Corrosion spots at the weld joins (which do not affect the structural integrity of the product and are a natural outcome of the material used).
- Corrosion of steel furniture and parts as a result of hard seafront or chlorinated environments.
- Any variations in colour, shade or gloss levels of finishes including stone tops and timbers.
- Changes of heart based on personal preference.
- Transportation costs for replacement parts/products, or labour costs for repair (these are charged at our discretion)
  Goods that have been held in storage for any period (due to the potential impact of environmental extremities in certain storage facilities).

The above Tait warranty terms are accepted by the customer and end-user upon order and supply.

POWDER COAT

CARE & MAINTENANCE

Wash regularly with warm soapy water and mild detergent using a soft cloth. For commercial, industrial or marine environments we recommend monthly maintenance. Always rinse well with water, to remove any remaining detergent.

Avoid steam cleaning, pressure washing, abrasive cleansers, steel brushes/wools and cleaners containing chlorine. Avoid scratching the surface by dry dusting. Never use strong solvents to clean powder coated surfaces. Aggressive solvents such as turpentine, white spirits, thinners, citrus based cleaners, Spray and Wipe, and other aggressive solvents are harmful to the extended life of the powder coated surface. Do not allow detritus, organic or man-made matter to settle on the product surface. We recommend removing any buildup of mineral deposits leaching from soils and fertilisers, should it occur on Tait's planters.

Rough treatment of powder-coated furniture can result in chipping of the coated surface; this is not covered under warranty.

Most Tait products come with protective fittings – stacking glides, bumpers, socks/feet and glides. These aid in protection against chipping and scratching. Powder coated chairs are designed to be set in place gently.

Touch-up paint may be purchased on request. It is advisable to repair minor nicks and scratches as soon as they appear.

When placing a furniture cover over a table for an extended period of time, it is recommended to first place an empty plastic pot plant in the centre of the table, then placing the furniture cover over the top. This will prevent the possibility of the furniture cover adhering to the table surface.

Should you wish to touch up any blemishes which may occur, please contact your nearest Tait showroom and request a Powder Coat Touch Up Kit. Please follow our Powder Coat Touch Up Guide (available under 'Dimensions and Specs – Download Assets' on the product page) for application details.

WARRANTY

Powder coat is a decorative finish for indoor and outdoor use. While it assists with metal protection, it is not a corrosion protection in its own right. The components of Tait powder coated products are produced in either aluminium, stainless steel or mild steel.

The mild steel base materials are treated with two levels of pre-protection that guard against corrosion. The products are then powder coated to make the surface resistant to corrosion and suitable for use in exterior environments.

Minor corrosion spots at the weld joins – under table tops, bases and seat frames, may be evident on mild steel products. These do not affect the structural integrity of the product and are not

covered by the Tait warranty.

Whilst every care is taken to provide the most suitable finish according to the use and the environment the product will be subjected to, Tait cannot guarantee this decorative finish against scratching, scuffing, chipping, fading or corrosion as a result of use in harsh seafront, extreme or environments where chlorine is present.

Tait offer a range of powder coat colours which offer excellent UV stability and are suitable for use in outdoor applications. Whilst powder coat offers excellent colour retention, natural fading is not covered under the Tait warranty. To ensure longevity of this finish please refer to the care and maintenance.

The warranty does not cover any occurrence of detritus, organic or man-made matter settling on the product surface. The warranty also excludes buildup of mineral deposits leaching from soils and fertilisers, should it occur on the surface of Tait's planters. Nor does this warranty cover any product corrosion directly caused by aforementioned matter.

Tait assume no responsibility for product damage caused by the use of furniture covers.

GALVANISED STEEL

CARE & MAINTENANCE

Hot-dip galvanising a mild steel frame provides an extra layer of protection from corrosion. We offer a galvanised finish on some of our steel products specified for use in extreme environmental conditions, or for those seeking an industrial aesthetic.

For the technically inclined and detail-oriented, here are some fun facts about a galvanised steel finish:

-It has a protective zinc coating which gives a sacrificial layer that inhibits corrosion of the base metal
-Tait uses the hot-dip galvanizing method whereby each piece is submerged in a bath of molten hot zinc
-It is very low-maintenance
-It's the Real McCoy of industrial finishes and so surface irregularities, such as small bumps and surface coarseness will be apparent but is all part of the appeal
-It is bright silver when new and will gently dull over time. But don't we all...

We offer a hot-dip galvanised finish on the following collections:
-Jak & Jil, Flint Collection , Kink Collection, Stripe Stool

No specific maintenance is required; however, we recommend washing your galvanised products with water and a soft brush every six months to remove dirt and debris build-up.

Careless handling, treatment or misuse of our products can result in damage and is not covered under our manufacturer's warranty.

WARRANTY

Galvanised steel is an industrial finish which offers superior corrosion protection. Surface irregularities, such as small bumps and surface coarseness may be apparent and are characteristic of the finish. Whilst care is taken to remove these irregularities where possible, they are a result of the galvanising process and are not covered under warranty.

SPOTTED GUM

CARE & MAINTENANCE

Tait uses Spotted Gum species Corymbia (eucalyptus) Malacuta – a sustainable timber native to Australia – and all products finished with Spotted Gum have been pre-oiled using Tait's Exterior Oil finish. An oiled table will absorb liquids less quickly, keeping it clean for longer. The hotter the climate and the greater the exposure to the sun, the more frequently your timber will need to be oiled. We recommend a quarterly application in a harsh climate or commercial environment if you wish to maintain the original timber colour.

To retain your furniture's ex-factory finish and to comply with warranty requirements, please ensure you can provide evidence that care and maintenance has been performed.

Clean regularly and immediately after use with a damp cloth to prevent fluids from penetrating deep into the timber. Remove stubborn remains of dirt in the timber by using a stiff brush and some water.

DO NOT:
– Use a high-pressure cleaner as you will permanently damage the wood fibres.
– Use steel wool, wire brushes or any other abrasive for everyday cleaning.

Surface clean the timber elements of your outdoor furniture pieces at least twice a year. Wash the surfaces thoroughly with clean water to remove dust, grime and insects. A build-up of dust and

grime can lead to the increased growth of green algae and other surface fouling.

Recoating your timber
To restore the original appearance of timber please contact Tait's customer service (customerservice@madebytait.com.au) to request a maintenance kit and follow the Exterior Oil Reapplication Guide (under "Dimension Specs - Download Assets" on the website product page of your Tait product).

TANNIN
Tannin is a naturally occurring substance in timber and will leach the first few times it is exposed to water. It will stain timber decking and paved areas that are light in colour. Objects left on the timber surface will also draw tannin out, creating surface marks. Removal of tannin stains will require the use of a soap solution or a deck/paving cleaner. Tannin stains will also fade when exposed to UV light. Tannin staining is not covered by the Tait warranty.

When placing a furniture cover over a table for an extended period of time, it is recommended to first place an empty plastic pot plant in the centre of the table, then place the furniture cover over the top. This will prevent the possibility of the furniture cover adhering to the table surface.

Careless handling, treatment or misuse of our products can result in damage and is not covered under our manufacturer's warranty.

WARRANTY

Tait use Spotted Gum species Corymbia (Eucalyptus) Maculata a sustainable timber native to Australia. We select our timber carefully to address cracks, warping and splinters. Timber is a natural product and may be prone to unforeseen changes, particularly when exposed to extremes in temperature and humidity. The timber is covered for 1 year from the date of purchase, subject to proper maintenance by the purchaser and fair wear and tear. The above warranty extends to the timber for serious faults (such as severe twisting or severe splitting).

End checking may appear and is not claimable under warranty. Tannin may leach from the timber and may stain timber decking and paved surfaces that are light in colour. This is not covered by the Tait warranty. Please refer to the timber section of the care and maintenance instructions for further information on tannin. Any changes in the visual appearance of timber that are directly linked to ageing are not covered by warranty. As timber is a living material, the appearance of its surface evolves naturally over time.

Tait assumes no responsibility for product damage caused by the use of furniture covers.

SUITABLE FOR

OUTDOORS

HIGH UV

FEATURES

MADE IN AUSTRALIA

RECYCLABLE MATERIALS

SUSTAINABLE TIMBER

5 YEAR STRUCTURAL WARRANTY